MONOGRAM AEROSPACE FASTENERS
3423 SOUTH GARFIELD AVENUE
LOS ANGELES , CALIFORNIA 90040

MONOGRAM AEROSPACE FASTENERS

Printed copies are for reference only.

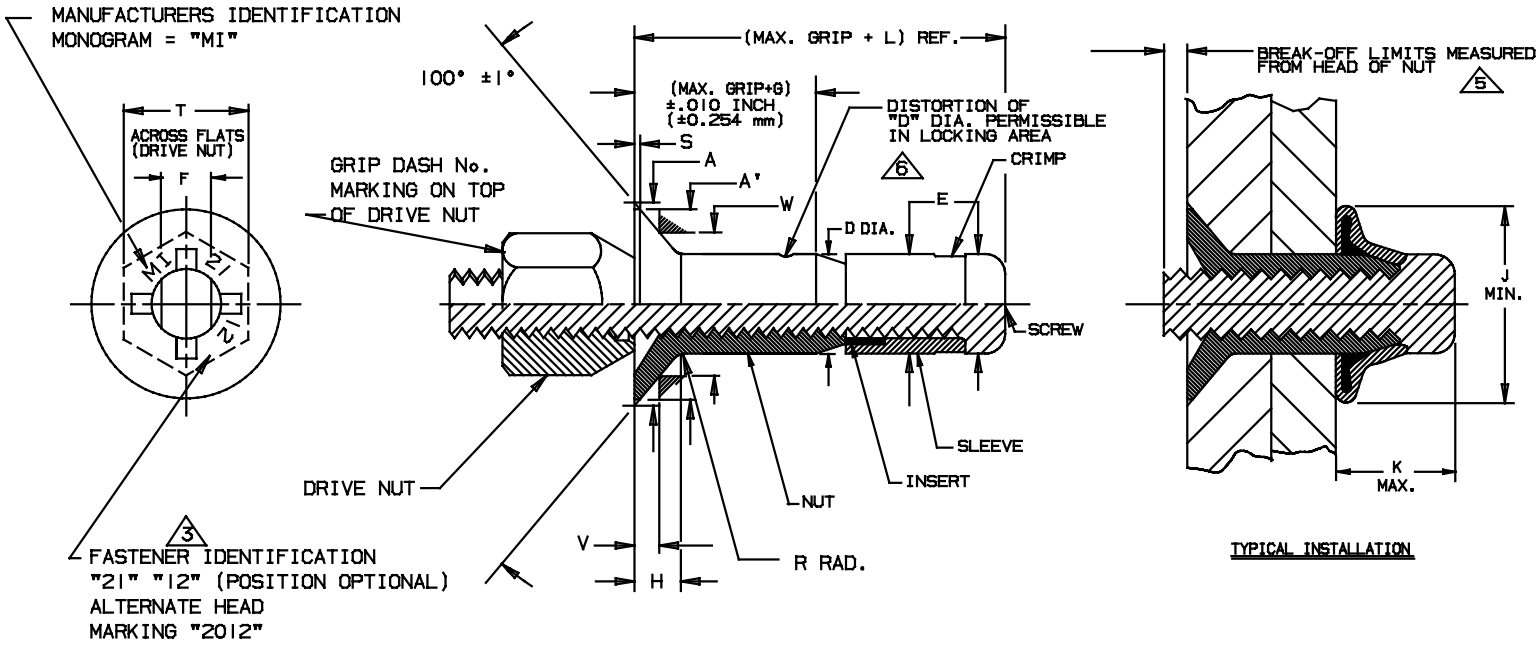

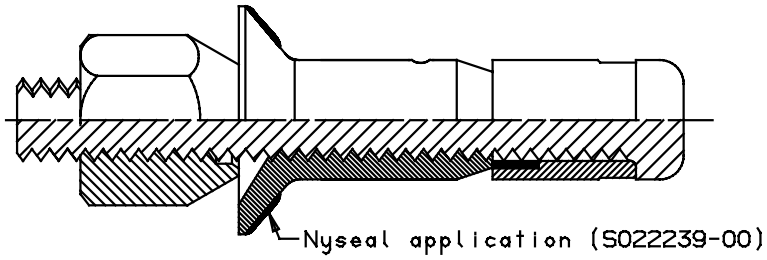

PART DESIGNATION: MBFS2112S-()-()

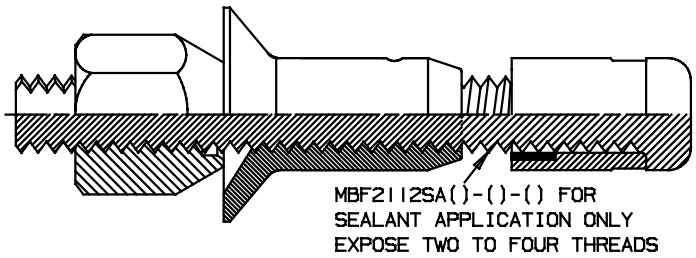

TABLE I

PART NUMBER	A DIA. REF.		A' DIA. MIN.		D DIA.		E DIA. MAX.		F WRENCH FLATS		G REF.		H REF.		L REF.		R RAD. MAX.		S MAX.		T ACROSS HEX. REF.	
	INCH	mm	INCH	mm	INCH	mm	INCH	mm	INCH	mm	INCH	mm	INCH	mm	INCH	mm	INCH	mm	INCH	mm	INCH	mm
MBF2112-5-()	.332 .325	8,43 8,25	.296	7,52	.1645 .1625	4,178 4,128	.1640	4,166	.085 .080	2,16 2,03	.017	0,43	.070	1,78	.512	13,00	.030	0,76	.015	0,38	.375	9,52
MBF2112-6-()	.385 .378	9,78 9,60	.342	8,69	.1985 .1965	5,042 4,991	.1985	5,042	.113 .108	2,87 2,74	.027	0,68	.077	1,96	.575	14,61	.030	0,76	.019	0,48	.375	9,52
MBF2112-7-()	.416 .409	10,57 10,39	.373	9,47	.2275 .2255	5,778 5,728	.2275	5,778	.121 .116	3,07 2,95	.035	0,89	.077	1,96	.635	16,13	.030	0,76	.020	0,51	.375	9,52
MBF2112-8-()	.507 .499	12,88 12,67	.463	11,76	.2595 .2575	6,591 6,541	.2595	6,591	.135 .130	3,43 3,30	.055	1,40	.104	2,64	.700	17,78	.030	0,76	.020	0,51	.375	9,52
MBF2112-9-()	.538 .530	13,66 13,46	.494	12,55	.2895 .2875	7,353 7,303	.2895	7,353	.152 .147	3,86 3,73	.065	1,65	.104	2,64	.815	20,70	.030	0,76	.020	0,51	.500	12,70
MBF2112-10-()	.635 .626	16,13 15,90	.577	14,66	.3115 .3095	7,912 7,861	.3110	7,899	.152 .147	3,86 3,73	.070	1,78	.136	3,45	.892	22,66	.040	1,02	.026	0,66	.500	12,70
MBF2112-11-()	.666 .657	16,92 16,69	.608	15,44	.3435 .3415	8,725 8,674	.3433	8,720	.185 .180	4,70 4,57	.075	1,90	.136	3,45	.941	23,90	.040	1,02	.026	0,66	.500	12,70
MBF2112-12-()	.762 .752	19,35 19,10	.696	17,68	.3745 .3725	9,512 9,462	.3740	9,500	.185 .180	4,70 4,57	.080	2,03	.162	4,11	1.090	27,69	.040	1,02	.029	0,74	.500	12,70

U.S. PATENT NO. 4747202, 4772167 AND 4967463
EUROPEAN PATENT NO. 0152531 & 0244783

MONOGRAM
CODE IDENT. NO.
98524

APPROVED DATE
ECN #3923
08-07-84

REV. LETTER & DATE
ECN # 3696
"Z" 02-23-06

NOTICE: THIS DRAWING IS PART OF THE PROPRIETARY ARTICLE HEREIN DISCLOSED, OWNED BY MONOGRAM AEROSPACE FASTENERS, ANY PARTY BY ACCEPTING THIS DOCUMENT ASSUMES CUSTODY THEREOF AND AGREES:
A. THE INFORMATION SET FORTH HEREIN IS GIVEN IN CONFIDENCE AND THIS DOCUMENT WILL NOT BE COPIED OR REPRODUCED IN WHOLE OR IN PART, NOR ITS CONTENTS REVEALED IN ANY MANNER TO ANY PERSON EXCEPT TO MEET THE PURPOSE FOR WHICH IT WAS DELIVERED.
B. WITHOUT THE WRITTEN CONSENT OF MONOGRAM AEROSPACE FASTENERS, THIS DOCUMENT AND THE INFORMATION CONTAINED HEREIN UNDER NO CIRCUMTANCES WILL BE USED IN THE MANUFACTURE OR REPRODUCTION OF THE ARTICLE DISCLOSED, AND DELIVERY OF THIS DOCUMENT SHALL NOT CONSTITUTE ANY RIGHT OR LICENSE TO DO SO.

TITLE
BLIND FASTENER 100° FLUSH HEAD
FOR ADVANCED COMPOSITE MATERIAL
TITANIUM

STANDARD

MBF 2112

MONOGRAM AEROSPACE FASTENERS
3423 SOUTH GARFIELD AVENUE
LOS ANGELES , CALIFORNIA 90040

® MONOGRAM AEROSPACE FASTENERS

APPLICABLE SPECIFICATIONS:

PROCUREMENT SPECIFICATION:	MBF 2000.
INSTALLATION & INSPECTION SPECIFICATION	MBF 2001.
SPECIAL LUBE AND FINISH:	MBF 2002.
PART NUMBER ASSIGNMENT:	MBF 2004.

TABLE I (CONT)

PART NUMBER	MINIMUM AVAILABLE GRIP DASH NO.	INSTALLED DIMENSIONS: RECOMMENDED HOLE SIZE		J DIA. MIN.		K MAX.		BREAK-OFF LIMITS 5		MECHANICAL PROPERTIES: TENSILE STRUCTURAL FAILURE(MIN.)		DOUBLE SHEAR MIN.		LOCKING TORQUE MIN.		V GAGE PROT.		W GAGE DIA.	
		INCH	mm	INCH	mm	INCH	mm	INCH	mm	LBS.	N	LBS.	N	IN-LBS	N-m	INCH	mm	INCH	mm
MBF2112-5-()	-150	.168 .165	4,27 4,19	.250	6,35	.300	7,62	+.103 -.000	+2,62 -0,00	900	4000	3150	14010	1.0	0,113	.0207 .0174	0,526 0,442	.2832 .2830	7,193 7,188
MBF2112-6-()	-150	.202 .199	5,13 5,05	.300	7,62	.350	8,89	+.103 -.000	+2,62 -0,00	1400	6230	4600	20460	1.5	0,170	.0245 .0212	0,622 0,538	.3272 .3270	8,311 8,306
MBF2112-7-()	-150	.231 .228	5,88 5,79	.350	8,89	.400	10,16	+.103 -.000	+2,62 -0,00	1600	7120	6050	26910	2.0	0,226	.0358 .0324	0,909 0,823	.3315 .3313	8,420 8,415
MBF2112-8-()	-200	.263 .260	6,68 6,60	.400	10,16	.450	11,43	+.103 -.000	+2,62 -0,00	2100	9340	7900	35140	2.5	0,282	.0318 .0279	0,808 0,709	.4320 .4318	10,973 10,968
MBF2112-9-()	-200	.293 .290	7,44 7,37	.450	11,43	.500	12,70	+.103 -.000	+2,62 -0,00	2600	11565	9800	43590	3.0	0,339	.0441 .0407	1,120 1,034	.4320 .4318	10,973 10,968
MBF2112-10-()	-250	.315 .312	8,00 7,92	.475	12,06	.550	13,97	+.103 -.000	+2,62 -0,00	3600	16010	11350	50480	3.5	0,400	.0405 .0365	1,029 0,927	.5389 .5385	13,688 13,678
MBF2112-11-()	-250	.347 .344	8,81 8,74	.525	13,33	.575	14,60	+.103 -.000	+2,62 -0,00	4400	19570	13850	61600	4.0	0,452	.0539 .0500	1,369 1,270	.5389 .5385	13,688 13,678
MBF2112-12-()	-250	.378 .375	9,60 9,52	.575	14,60	.625	15,87	+.103 -.000	+2,62 -0,00	5000	22240	16450	73170	4.0	0,452	.0458 .0415	1,163 1,054	.6532 .6528	16,591 16,581

MATERIAL AND HEAT TREAT:

NUT: 6Al-4V TITANIUM PER MIL-T-9047 STA OR AMS4928 OR AMS4967 HEAT TREATED PER MIL-H-81200 TO 95 KSI SHEAR STRENGTH MINIMUM. MAXIMUM HYDROGEN CONTENT 125 PPM.

SCREW: A-286 PER AMS 5731, AMS 5732 OR AMS 5737 HEAT TREATED TO 175 KSI TENSILE MINIMUM.

SLEEVE: 304 STAINLESS STEEL PER AMS 5639 , FULLY ANNEALED.

INSERT: ACETAL PER ASTM D4181.

DRIVE NUT: MILD STEEL (COLOR GRAY).

FINISH: (-) NUT: KAL-GARD ANN-RO #1012 CONVERSION COATING OR PHOSPHATE FLOURIDE PER MONOGRAM SPECIFICATION PS741, MAY BE USED AT MANUFACTURER'S OPTION.

SLEEVE & SCREW: PASSIVATE PER ASTM A 967-96, KAL GARD ANN-RO #1013 CONVERSIONCOATING OPTIONAL.

INSERT: NONE.

DRIVE NUT : COLOR GREY

COLOR RED DYKEM FOR "LL" CODED.

TABLE II

2ND DASH NO. (GRIP)	GRIP RANGE: MIN. GRIP INCH	MIN. GRIP mm	MAX. GRIP INCH	MAX. GRIP mm
100	.050	1,27	.100	2,54
150	.100	2,54	.150	3,81
200	.150	3,81	.200	5,08
250	.200	5,08	.250	6,35
300	.250	6,35	.300	7,62
350	.300	7,62	.350	8,89
400	.350	8,89	.400	10,16
450	.400	10,16	.450	11,43
500	.450	11,43	.500	12,70
550	.500	12,70	.550	13,97
600	.550	13,97	.600	15,24
650	.600	15,24	.650	16,51
700	.650	16,51	.700	17,78
750	.700	17,78	.750	19,05
800	.750	19,05	.800	20,32
850	.800	20,32	.850	21,59
900	.850	21,59	.900	22,86
950	.900	22,86	.950	24,13
1000	.950	24,13	1.000	25,40
1050	1.000	25,40	1.050	26,67
1100	1.050	26,67	1.100	27,94
1150	1.100	27,94	1.150	29,21
1200	1.150	29,21	1.200	30,48
1250	1.200	30,48	1.250	31,75
1300	1.250	31,75	1.300	33,02
1350	1.300	33,02	1.350	34,29
1400	1.350	34,29	1.400	35,56
1450	1.400	35,56	1.450	36,83
1500	1.450	36,83	1.500	38,10
1550	1.500	38,10	1.550	39,37
1600	1.550	39,37	1.600	40,64
1650	1.600	40,64	1.650	41,91
1700	1.650	41,91	1.700	43,18

LUBRICANTS: DRY FILM LUBE PER MIL-L-46010 TYPE I OR EVERLUBE #812 PER MIL-L-81329, PARAFFIN WAX, OR CETYL ALCOHOL PER MIL-L-87132.

GENERAL NOTES:

1.) EXAMPLE OF PART NUMBER:

MBF 2112 ()- 6 - 300

- 300 — DESIGNATES GRIP (TABLE II)
- 6 — SECOND DASH (-) SEE NOTE 5
- 6 — DESIGNATES BASIC DIMENSIONS (TABLE I)
- () — DESIGNATES SPECIAL FINISH CODE
- 2112 — DESIGNATES BASIC PART NUMBER (BASIC PART : MBF2112SA()-6 -100) USED FOR SEALANT APPLICATION ONLY. MBFS2112S-6-500 USED WITH NYSEAL APPLICATION

2.) LOCKING FEATURE CONSISTS OF THREE (3) IDENTATIONS LOCATED 120° APART ON THE PERIPHERY OF THE NUT COMPONENT AND APPROXIMATELY .040" ABOVE INTERSECTION OF THE NUT NOSE ANGLE AND O.D.

3.) ALTERNATE HEAD MARKING: "MI" AND "2012".

4.) COMPOSI-LOK FASTENERS WITH SELECTED COMBINATIONS OF THE ABOVE LUBRICANTS AND FINISHES ARE SPECIALLY CODED AND MAY BE SUBSTITUTED FOR EQUIVALENT NON-CODED PARTS AT MANUFACTURER'S OPTION. SEE INTERCHANGEABILITY SPECIFICATION MBF2007.

5 **AN "L" IN PLACE OF THE DASH (-) BETWEEN THE DIAMETER DASH NUMBER AND THE GRIP DASH NUMBER DESIGNATES MODIFIED BREAK-OFF LIMITS OF +.053/-.050. "e.g. MBF2112()-6L200". AN "LL" IN PLACE OF THE DASH (-) BETWEEN THE DIAMETER DASH NUMBER AND THE GRIP DASH NUMBER DESIGNATES MODIFIED BREAK-OFF LIMITS OF +.000/-.103. "e.g. MBF2112()-6LL200".**

6 DISTORTION SHALL NOT PREVENT INSERTION OF THE FASTENER INTO A RING GAUGE OF LENGTH EQUAL TO ONE DIAMETER AND HOLE DIAMETER EQUAL TO A MINIMUM RECOMMENDED HOLE. FORCE FOR INSERTION SHALL NOT EXCEED 5.0 POUNDS.

U.S. PATENT NO. 4747202, 4772167 AND 4967463
EUROPEAN PATENT NO. 0152531 & 0244783

MONOGRAM
CODE IDENT. NO.
98524

APPROVED DATE
ECN #3923
08-07-84

REV. LETTER & DATE
ECN # 3696
"Z" 02-23-06

NOTICE: THIS DRAWING IS PART OF THE PROPRIETARY ARTICLE HEREIN DISCLOSED, OWNED BY MONOGRAM AEROSPACE FASTENERS, ANY PARTY BY ACCEPTING THIS DOCUMENT ASSUMES CUSTODY THEREOF AND AGREES:
A. THE INFORMATION SET FORTH HEREIN IS GIVEN IN CONFIDENCE AND THIS DOCUMENT WILL NOT BE COPIED OR REPRODUCED IN WHOLE OR IN PART, NOR ITS CONTENTS REVEALED IN ANY MANNER TO ANY PERSON EXCEPT TO MEET THE PURPOSE FOR WHICH IT WAS DELIVERED.
B. WITHOUT THE WRITTEN CONSENT OF MONOGRAM AEROSPACE FASTENERS, THIS DOCUMENT AND THE INFORMATION CONTAINED HEREIN UNDER NO CIRCUMTANCES WILL BE USED IN THE MANUFACTURE OR REPRODUCTION OF THE ARTICLE DISCLOSED, AND DELIVERY OF THIS DOCUMENT SHALL NOT CONSTITUTE ANY RIGHT OR LICENSE TO DO SO.

TITLE
BLIND FASTENER 100° FLUSH HEAD
FOR ADVANCED COMPOSITE MATERIAL
TITANIUM

STANDARD

MBF 2112